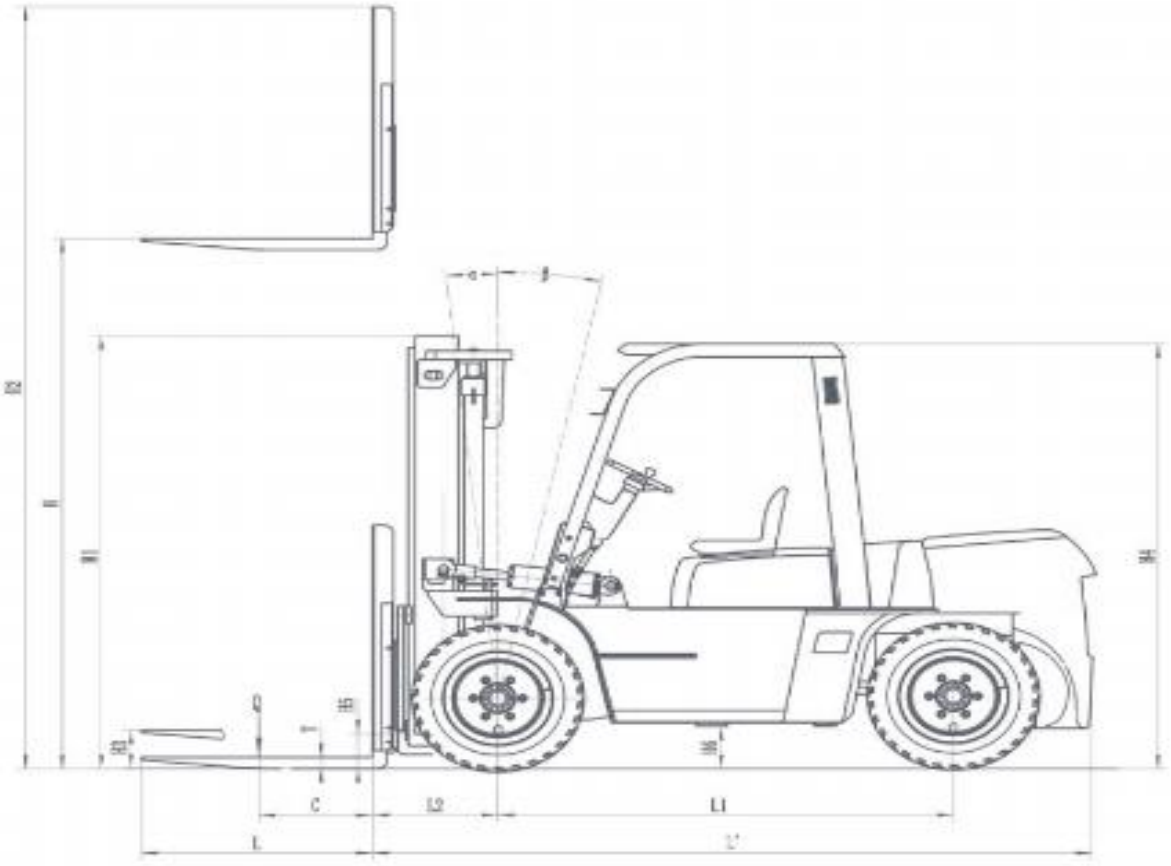
H2
H
H1
H4
H3
H5
H6
C
L2
L1
L
L'

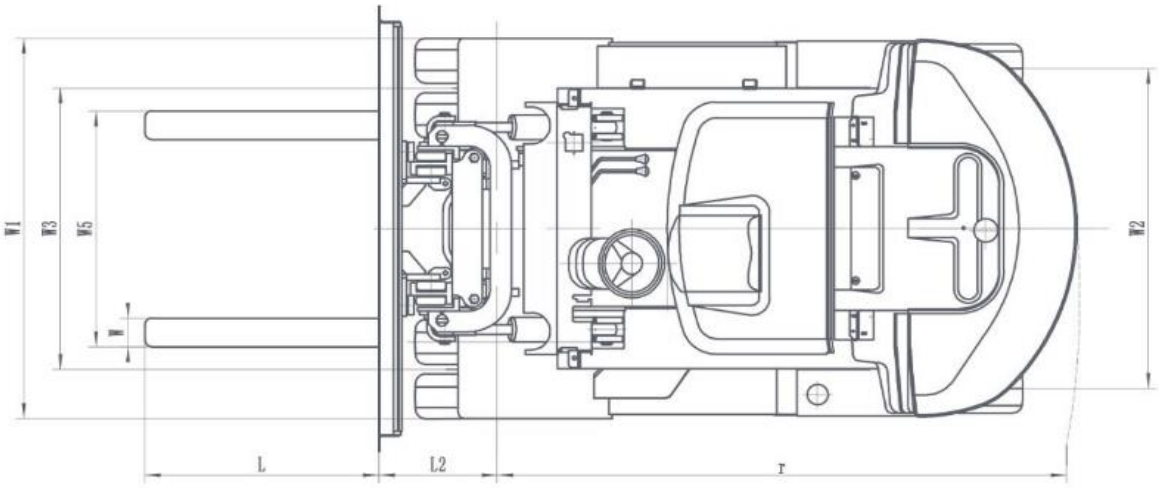
W1
W3
W5
W
W2
L
L2
r